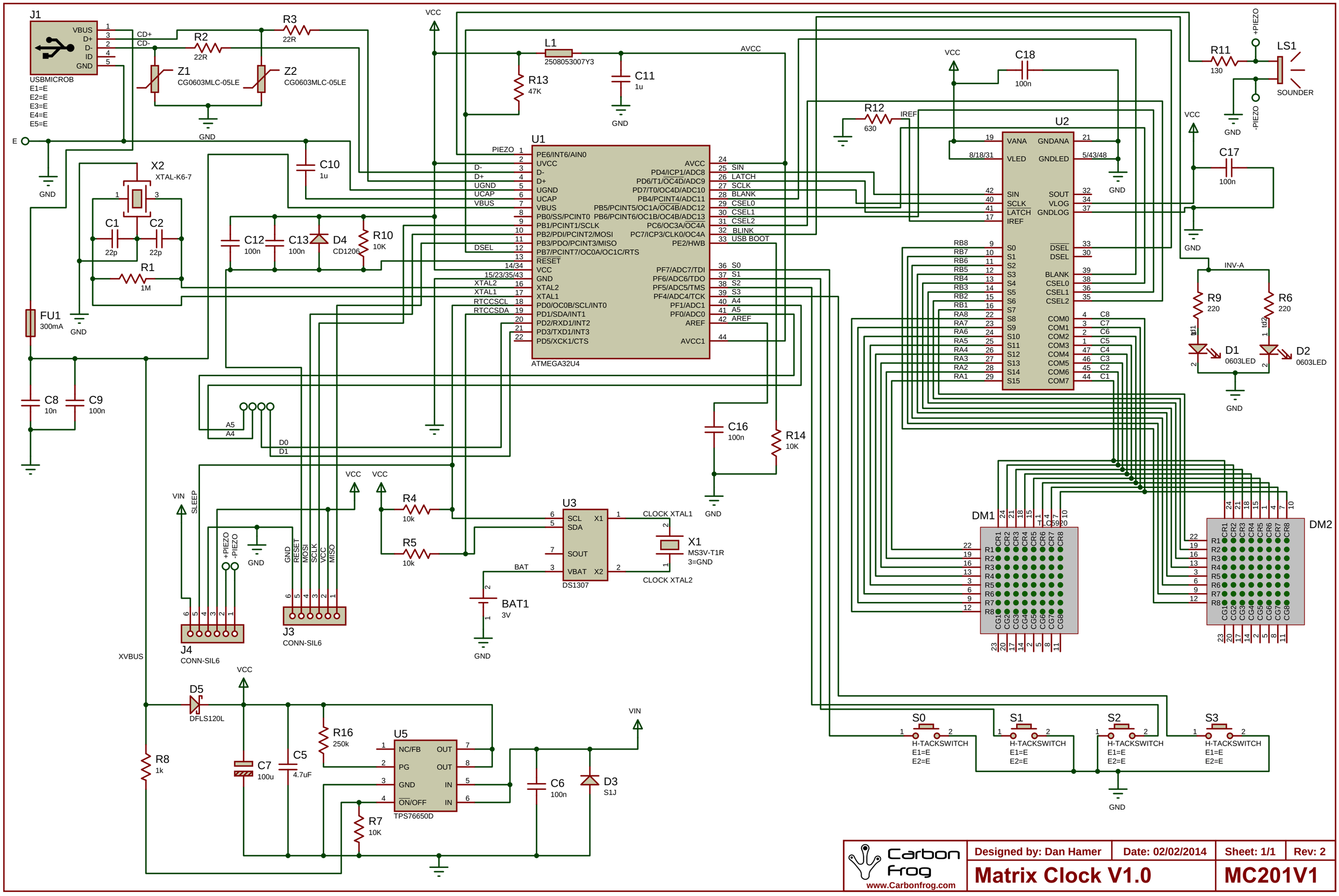

Carbon Frog www.Carbonfrog.com	Designed by: Dan Hamer	Date: 02/02/2014	Sheet: 1/1	Rev: 2
	Matrix Clock V1.0		MC201V1